ART. B222

FIXED BRIDGE HANDLE WITH THREADED HOLE

MATERIAL:
Duroplast.
Oils and greases resistant.
High temperatures resistant.

SURFACE:
Glossy.

COLOUR:
Black (RAL 9011).

HOLE :
Female threaded blind hole
obtained by moulding the plastic.

SPECIAL REQUESTS:

- None.

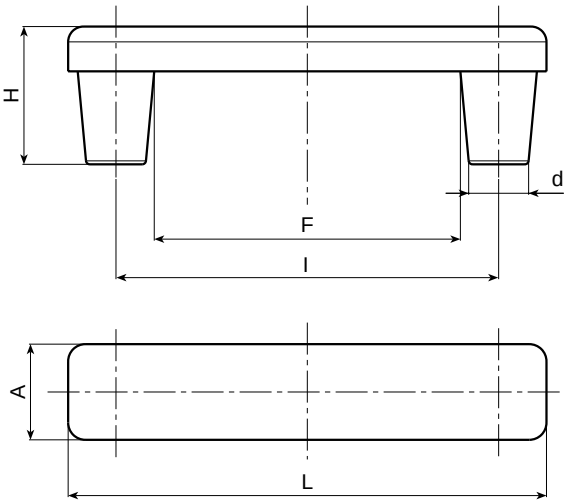

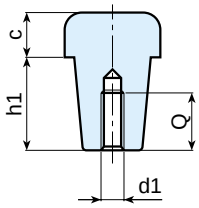

Art.	L	I	F	A	H	h1	c	d	d1	Q	Weight (gr)	F1 (N)	F2 (N)
B222-100 M6	125	**100**	80	25	35,5	23,5	12	15,5	**M6**	15	63	2000	1400

© JENCAN - Reproduction prohibited